
NTN
NTN
NTN

Single direction thrust ball bearings

Double direction angular contact thrust ball bearings

High speed / axial load duplex angular contact thrust ball bearings

Spherical roller thrust bearings

These bearings are designed primarily to support axial loads at contact angles between 30˚ and 90˚. Just as with radial bearings, these bearings differ according to the type of rolling element they use: there are thrust ball bearings that use balls and thrust roller bearings that use rollers.

The configuration and characteristics of each type of bearing are given.

With thrust bearings, it is necessary to supply an axial preload in order to prevent slipping movement between the bearing's rolling elements and raceways. For more detailed information on this point, please refer to the material concerning bearing preload on page A-62.

1. Single direction thrust ball bearings

As shown in **Diagram 1**, the steel balls of single direction thrust ball bearings are arranged between a pair of shaft housing washers (bearing shaft washer and housing shaft washer), and the normal contact angle is 90˚. Axial loads can be supported in only one direction, radial loads can not be accommodated, therefore these bearings are unsuitable for high speed operation.

Table 1 lists the standard cage types for single direction thrust ball bearings.

2. Angular contact thrust ball bearings

Angular contact thrust ball bearings are high precision bearings which are widely used to handle axial loads from machine tool main shafts. These bearings come in a number of varieties including double direction angular contact thrust ball bearings (series 5629 and 5620), and high speed / axial load duplex angular contact thrust ball bearings (HTA series).

These bearings have the same bore diameter and outer diameter as double row cylindrical roller bearings (series NN30, NN49, and NNU49) and can be arranged for use together. **Table 2** shows the construction and characteristics of these various bearings.

Table 1 Standard cage types for single direction thrust ball bearings

Bearing series	511	512	513	514
Molded resin cage	51100 ~51107	51200 ~51207	–	–
Pressed cage	51108 ~51152	51208 ~51224	51305 ~51320	51405 ~51415
Machined cage	51156 ~511/530	51226 ~51260	51322 ~51340	51416 ~51420

Note: Due to their material properties, molded resin cages can not be used in applications where temperatures exceed 120˚C.

Diagram 1. Single direction thrust ball bearing (with pressed cage)

Table 2 Angular contact thrust ball bearing construction and characteristics

Bearing no.	Double direction angular contact thrust bearing	High speed / axial load duplex angular contact thrust ball bearing
Bearing series	Series 5629, 5620	HTA, DB series
Bearing construction	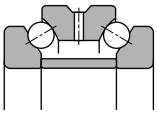	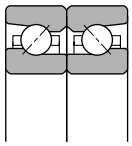
Initial contact angle	60°	40°, 30°
Standard cage type	Machined cage	Molded resin cage, Machined cage
Characteristics	● 5629 is used in combination with NN (NNU) 49 and 5620 with NN30. ● High axial direction rigidity; can support axial loads in either direction ● Unsuitable for vertical shafts ● Oil inlet and oil groove dimensions listed in dimension charts	● HTA9, DB can be arranged and used with NN (NNU) 49: HTA0, DB can be arranged and used with NN30 ● Bearing outer diameter dimension same as double direction angular contact thrust ball bearings minus tolerances (suffix code: L); can only support axial loads ● Axial rigidity is less than that of high-speed duplex angular contact ball bearings (for axial loads). ● Allowable axial load should be regulated to approx. 1/6 of the rated basic static load
Bearing accuracy	See **Table 6.9** on p. A-41	See **Table 3**
Standard preload	See **Table 5**	
Interchangeability	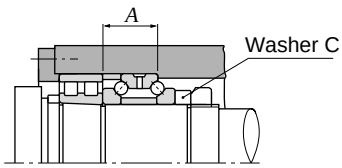 Double direction angular contact thrust ball bearing Series 5629 Series 5620	Dimension A = dimension $2B$ 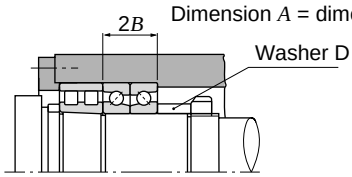 High speed / axial load duplex angular contact thrust ball bearing HTA9DB series HTA0DB series Because dimension A = dimension $2B$, it is necessary to change the washer dimension.

For more details about these bearings, please refer to the **NTN** machine tool precision bearing catalog.

Table 3 Standard cages for duplex angular contact ball bearings for high-speed axial loads

Bearing series	HTA 9	HTA 0
Formed resin cage	–	HTA 010～HTA 032
Machined cage	HTA 920～HTA 964	HTA 005～HTA 009 HTA 034～HTA 064

Table 4 Tolerance of high speed / axial load duplex angular contact thrust ball bearings

Table 4.1 Inner rings

Units μm

Nominal bore dia. d mm		Dimensional tolerance of mean bore diameter within plane Δ_{dmp}				Bore diameter variation V_{dp}				Dimensional tolerance of mean inside diameter within planee V_{dmp}		Side runout with bore S_d		Axial runout S_{ia}		Tolerance of combination width Δ_{Bs}		Width variation V_{Bs}	
		Class 5		Class 4 ❶		Diameter series 9		Diameter series 0											
over	up to/incl.	High	Low	High	Low	Class 5	Class 4	Class 5	Class 4	Class 5	Class 4	Class 5	Class 4	Class 5	Class 4	Class 5	Class 4	Class 5	Class 4
						Max		Max		Max		Max		Max		High	Low	Max	
18	30	0	−6	0	−5	6	5	5	4	3	2.5	8	4	5	3	0	−240	5	2.5
30	50	0	−8	0	−6	8	6	6	5	4	3	8	4	5	3	0	−240	5	3
50	80	0	−9	0	−7	9	7	7	5	5	3.5	8	5	6	5	0	−300	6	4
80	120	0	−10	0	−8	10	8	8	6	5	4	9	5	6	5	0	−400	7	4
120	150	0	−13	0	−10	13	10	10	8	7	5	10	6	8	6	0	−500	8	5
150	180	0	−13	0	−10	13	10	10	8	7	5	10	6	8	6	0	−500	8	5
180	250	0	−15	0	−12	15	12	12	9	8	6	11	7	8	6	0	−600	10	6
250	315	0	−18	0	−14	18	14	14	11	9	8	13	8	10	8	0	−700	13	8
315	400	0	−23	0	−16	23	17	18	12	12	9	15	10	13	10	0	−800	15	10

❶ The allowable deviation of single bore diameter deviation Δ_{ds} is identical to the allowable deviation of the single plane mean bore diameter deviation.

Table 4.2 Outer ring

Units μm

Nominal outside dia. D mm		Dimensional tolerance of mean bore diameter Δ_{Dmp} within plane and outer diameter tolerance Δ_{Ds}		Axial runout S_{ea}		Width variation V_{cs}	
		Class 5	Class 4	Class 5	Class 4	Class 5	Class 4
over	up to/incl.	High	Low	Max		Max	
30	50	−25	−36	8	5	5	2.5
50	80	−30	−43	10	5	6	3
80	120	−36	−51	11	6	8	4
120	150	−43	−61	13	7	8	5
150	180	−43	−61	14	8	8	5
180	250	−50	−70	15	10	10	7
250	315	−56	−79	18	10	11	7
315	400	−62	−87	20	13	13	8
400	500	−68	−95	23	15	15	10

Note: 1. These standards are NTN standards.
2. Bearing which use these accuracies should be appended with the accuracies code L.
(Example: HTA 020 DB / GNP 4L)

Table 4 Standard preload

Units N {kgf}

Bore dia. no	5629 Normal preload GN	5629 Medium preload GM	5620 Normal preload GN	5620 Medium preload GM	HTA9DB Normal preload GN	HTA9DB Medium preload GM	HTA0DB Normal preload GN	HTA0DB Medium preload GM	HTA0ADB Normal preload GN	HTA0ADB Medium preload GM
05	———	———	294 {30}	685 {70}	———	———	390 {40}	685 {70}	147 {15}	294 {30}
06			490 {50}	785 {80}						
07							685 {70}	1,270 {130}	294 {30}	590 {60}
08										
09										
10			980 {100}	1,670 {170}						
11									490 {50}	885 {90}
12										
13										
14			1,470 {150}	2,450 {250}			980 {100}	1,570 {160}	590 {60}	1,470 {150}
15										
16								1,960 {200}		
17									885 {90}	1,960 {200}
18							1,470 {150}	2,450 {250}		
19										
20	1,470 {150}	2,450 {250}	1,960 {200}	3,250 {330}	980 {100}	1,670 {170}				
21									980 {100}	2,450 {250}
22							1,960 {200}	3,450 {350}		
24	1,960 {200}	2,940 {300}			1,270 {130}	2,450 {250}				
26							2,940 {300}	5,400 {550}	1,470 {150}	3,450 {350}
28										
30					1,960 {200}	3,450 {350}				
32							3,900 {400}	7,350 {750}	2,450 {250}	4,900 {500}
34										
36	2,450 {250}	3,900 {400}	2,450 {250}	3,900 {400}	3,450 {350}	5,900 {600}	4,900 {500}	9,300 {950}		
38									3,450 {350}	6,850 {700}
40					3,900 {400}	6,850 {700}				
44	2,940 {300}	4,400 {450}	2,940 {300}	4,400 {450}			6,850 {700}	12,700 {1,300}		
48									3,900 {400}	7,850 {800}
52					4,900 {500}	8,850 {900}	8,850 {900}	15,700 {1,600}		
56	3,900 {400}	5,900 {600}							5,900 {600}	11,800 {1,200}
60			3,900 {400}	5,900 {600}	5,900 {600}	11,800 {1,200}	10,800 {1,100}	17,700 {1,800}		
64	4,900 {500}	7,350 {750}								

3. Spherical roller thrust bearings

Just like spherical roller bearings, the center of the spherical surface for spherical roller thrust bearings is the point where the raceway surface of the housing raceway disc meets the center axis of the bearing. Since spherical roller thrust bearings incorporate barrel-shaped rollers as rolling elements, they also have self-aligning properties. (See **Diagram 2**)

Under normal load conditions, the allowable misalignment is 1˚ to 2˚, although this will vary depending upon the bearing's dimension series.

These bearings use machined copper alloy cages and a guide sleeve is attached to the inner ring to guide the cage. The axial load capacity of these bearings is high, and a certain amount of radial load can also be accommodated when the ring is in an axially loaded state. However, it is necessary to operate these bearings where the load condition meet $F_r/F_a \leqq 0.55$.

These bearings have some spots where lubricant cannot enter such as the gap between the cage and guide sleeve. It is necessary to use oil lubrication even in low speed operation.

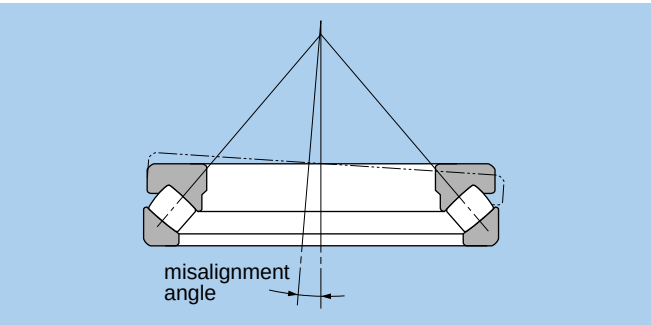

Diagram 2. Spherical roller thrust bearings

4. Cylindrical roller thrust bearings

Thrust bearings incorporating cylindrical rollers are available in single row, double row, triple row, and four row varieties. (See **Diagram 3**) NTN Engineering offers the 811, 812 and 893 series of standard series bearings that conform to dimension series 11, 12 and 93 prescribed in JIS, as well as other special dimensions.

Cylindrical roller thrust bearings are able to receive axial loads only, and have high axial rigidity which makes them well suited for heavy axial loads. Needle roller bearing information for series 811, 812, and 893 is also listed in the dimension tables.

Furthermore, bearings with dimensions not listed in the dimension tables are also manufactured. Contact NTN Engineering for more information.

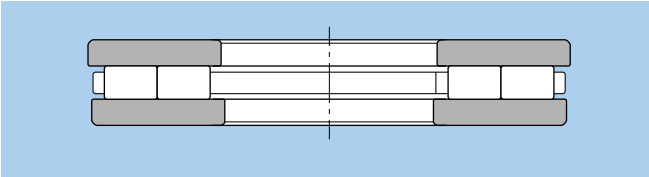

Diagram 3. Double row cylindrical roller thrust bearings

5. Tapered roller thrust bearings

Although not listed in the dimension tables, tapered roller bearings like those in **Diagram 4** are also manufactured. Contact **NTN** Engineering for more detailed information.

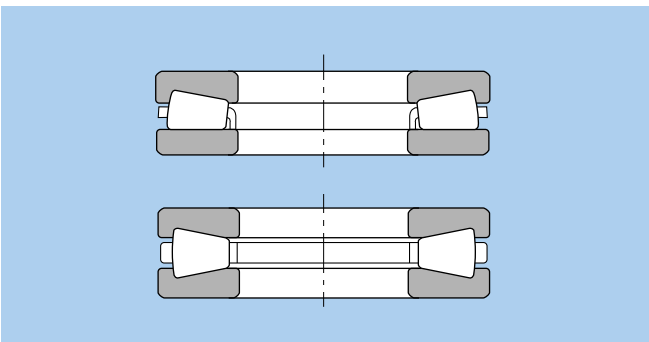

Diagram 4. Tapered roller thrust bearings